LMH2 Series

PROFADER™

Direct print resistance board

Long sliding life

Protection against dust

Horizontal style Control-bar design.

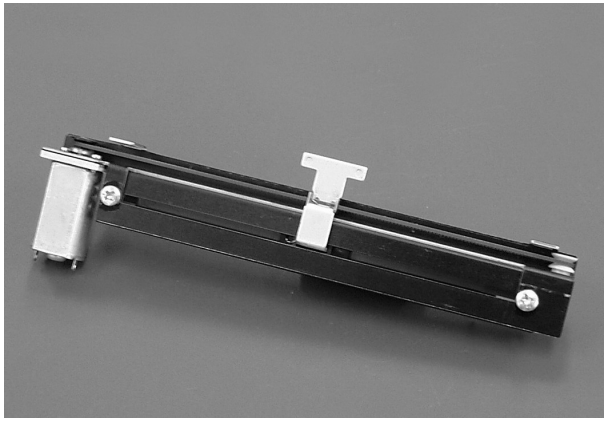

Model number

LMH2	- 1101	- B	10K	- 10V
Product type	Travel **1101**: 100mm **6101**: 60mm	Taper **B**: Linear taper **A**: Linear + Audio taper	Total resistance	DC-motor **10V**: 10V DC motor (MINEBEA) **M8V**: 8V DC motor (MABUCHI)

Circuit method

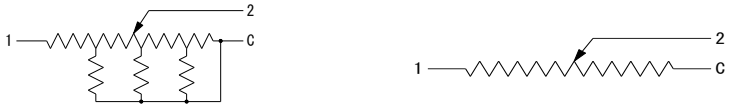

Electrical specifications

	LMH2-1101-B	LMH2-6101-B	LMH2-1101-A	LMH2-6101-A
Circuit (Unbalanced)	1		2	
Total resistance (1-C)(1-3)	5k, 10kohm			
Total resistance tolerance	20%			
Taper	Linear (Potentiometer circuit)		Linear (Potentiometer circuit), Audio (Ladder circuit)	
Linearity	±5% (Linear taper)			
Residual resistance	50ohm or less (Linear taper)			
Touch sense track Contact resistance	30ohm or less			
Attenuation accuracy	-		0~20dB: ±3.0dB (Audio taper)	
Insertion loss	-		0.5dB or less (Audio taper)	
Cut off (15Hz)	-		95dB Min. (Audio taper)	
Voltage proof	1 Min. at AC500V			
Insulation resistance	50Mohm or more at DC100V			
Max rating	DC20V (0.2W)			
Sliding noise level	47mV or less (by JIS C 6443)			
Sliding life	100,000 Cycles Min. (18cycles/min, Sliding noise level: Less than 100mV)			

Mechanical specifications

	LMH2-1101	LMH2-6101
Stroke length	100mm±0.5mm	60mm±0.5mm
Operating force	0.1~0.3N	
Strength of Nut-Attached	100Ncm	
Attached Parts	M3 screw (Length: Panel thickness + 3~5mm)	
Stopper strength	30N	
Push-pull strength	30N	

General specifications

	LMH2 Series
Temp.range	10V DC motor: -10 to +70 degs.C (Operating), -15 to +75 degs.C (Storage) Other motor: -10 to +50 degs.C (Operating), -15 to +60 degs.C (Storage)
Relative humidity	90%RH (No condensation)

Dimensions

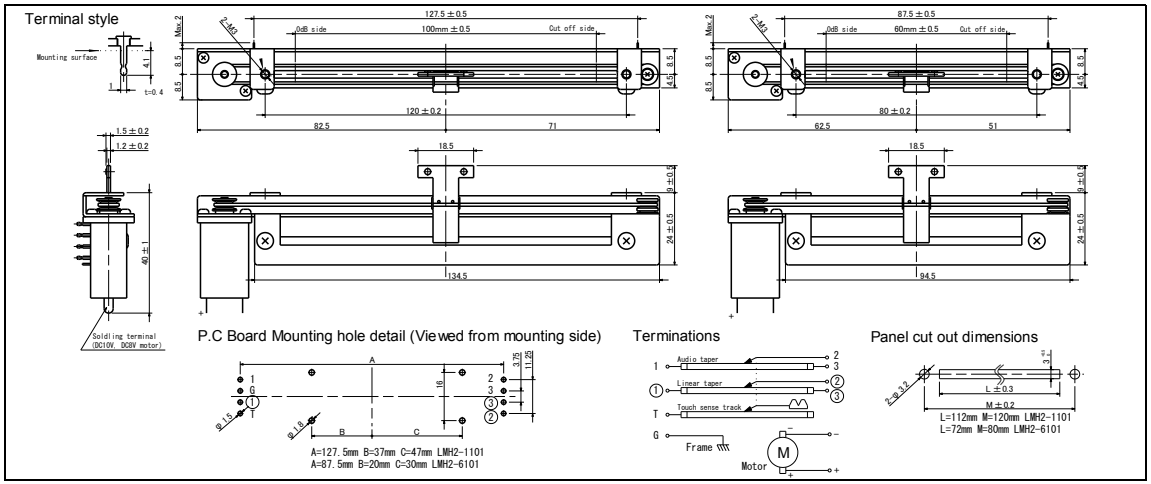

Output Law

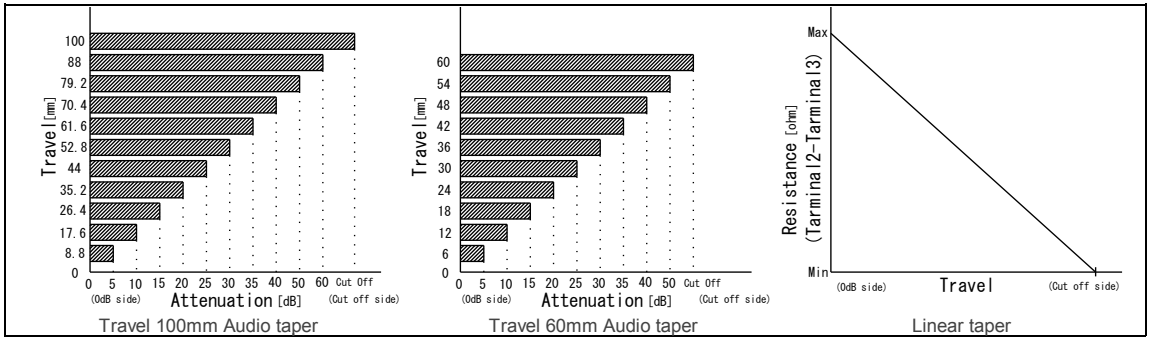

Note

* Solder heat resistance: 350deg C max, 5sec max, 2 times. (Manual soldering only)
* Please take care during soldering that the smoke from the solder does not flow inside a fader.
* If the flux sticks to a resistor board, it may cause a trouble with the fader.
* Move to one end in Control-bar on the occasion of knob wearing, and can break into it slowly.

The products and their specifications are subject to change without notice.

TOKYO KO-ON DENPA CO., LTD. www.tkd-corp.com EDF-201305

LMH5 Series

PROFADER™

Direct print resistance board

Long sliding life

Protection against dust

Horizontal style Control-bar design.

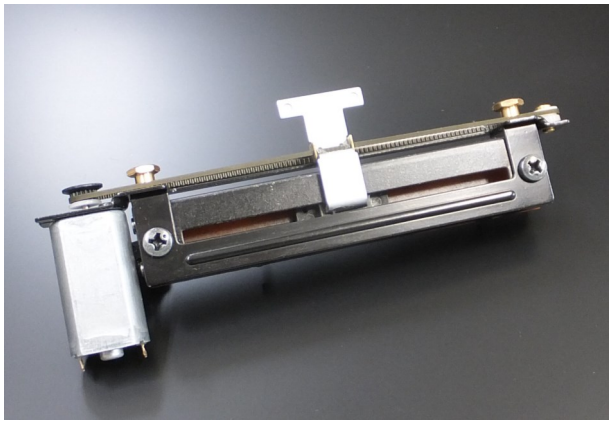

Model number

LMH5	- 1101	- B	10K	- M8V
Product type	Travel **1101**: 100mm **6101**: 60mm	Taper **B**: Linear taper **A**: Linear + Audio taper **AP**: Linear + AP taper (100mm)	Total resistance	DC-motor **M8V**: 8V DC motor (MABUCHI)

Circuit method

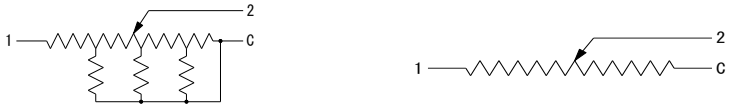

Electrical specifications

	LMH5-1101-B	LMH5-6101-B	LMH5-1101-A(AP)	LMH5-6101-A
Circuit (Unbalanced)	1		2	
Total resistance (1-C)(1-3)	5k, 10kohm			
Total resistance tolerance	20%			
Taper	Linear (Potentiometer circuit)		Linear (Potentiometer circuit), Audio (Ladder circuit)	
Linearity	±5% (Linear taper)			
Residual resistance	50ohm or less (Linear taper)			
Touch sense track Contact resistance	30ohm or less			
Attenuation accuracy	-		0~20dB: ±3.0dB (Audio taper)	
Insertion loss	-		0.5dB or less (Audio taper)	
Cut off (15kHz)	-		95dB Min. (Audio taper)	
Voltage proof	1 Min. at AC500V			
Insulation resistance	50Mohm or more at DC100V			
Max rating	DC20V (0.1W)			
Sliding noise level	47mV or less (by JIS C 6443)			
Sliding life	100,000 Cycles Min. (18cycles/min, Sliding noise level: Less than 100mV)			

Mechanical specifications

	LMH5-1101	LMH5-6101
Stroke length	100mm±0.5mm	60mm±0.5mm
Operating force	0.1~0.3N	
Strength of Nut-Attached	100Ncm	
Attached Parts	M3 screw (Length: Panel thickness + 3~5mm)	
Stopper strength	30N	
Push-pull strength	30N	

General specifications

	LMH5 Series
Temp.range	8V DC motor: -10 to +50 degs.C (Operating), -15 to +60 degs.C (Storage)
Relative humidity	90%RH (No condensation)

Dimensions

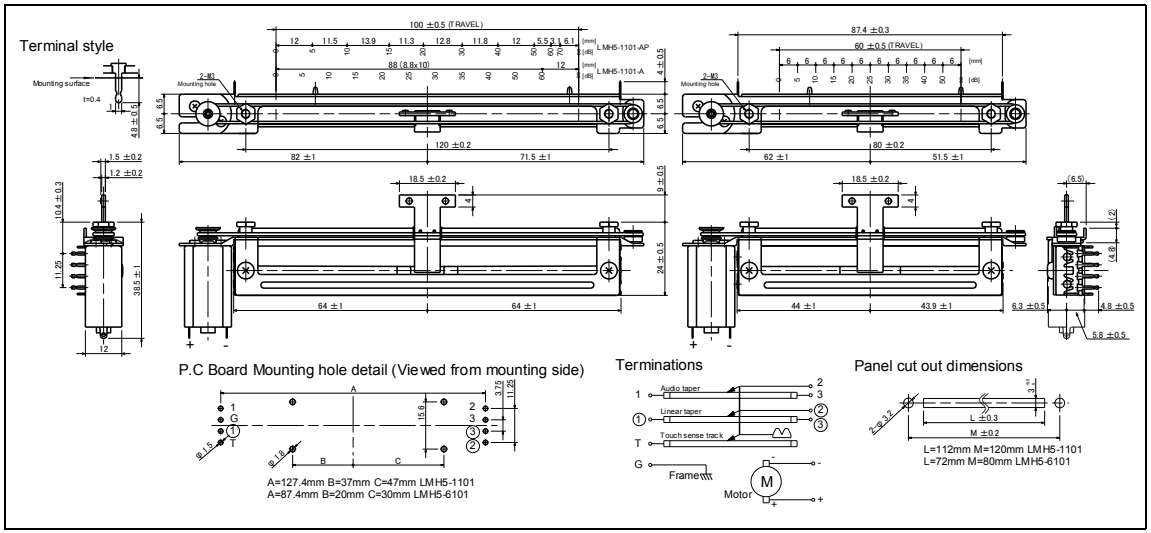

Output Law

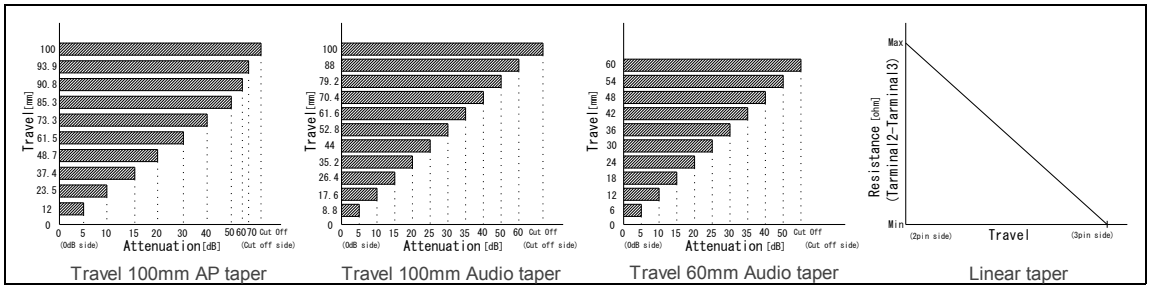

Travel 100mm AP taper | Travel 100mm Audio taper | Travel 60mm Audio taper | Linear taper

Note

* Solder heat resistance: 350deg C max, 5sec max, 2 times. (Manual soldering only)
* Please take care during soldering that the smoke from the solder does not flow inside a fader.
* If the flux sticks to a resistor board, it may cause a trouble with the fader.
* Move to one end in Control-bar on the occasion of knob wearing, and can break into it slowly.

The products and their specifications are subject to change without notice.

TOKYO KO-ON DENPA CO., LTD. www.tkd-corp.com EDF-201504