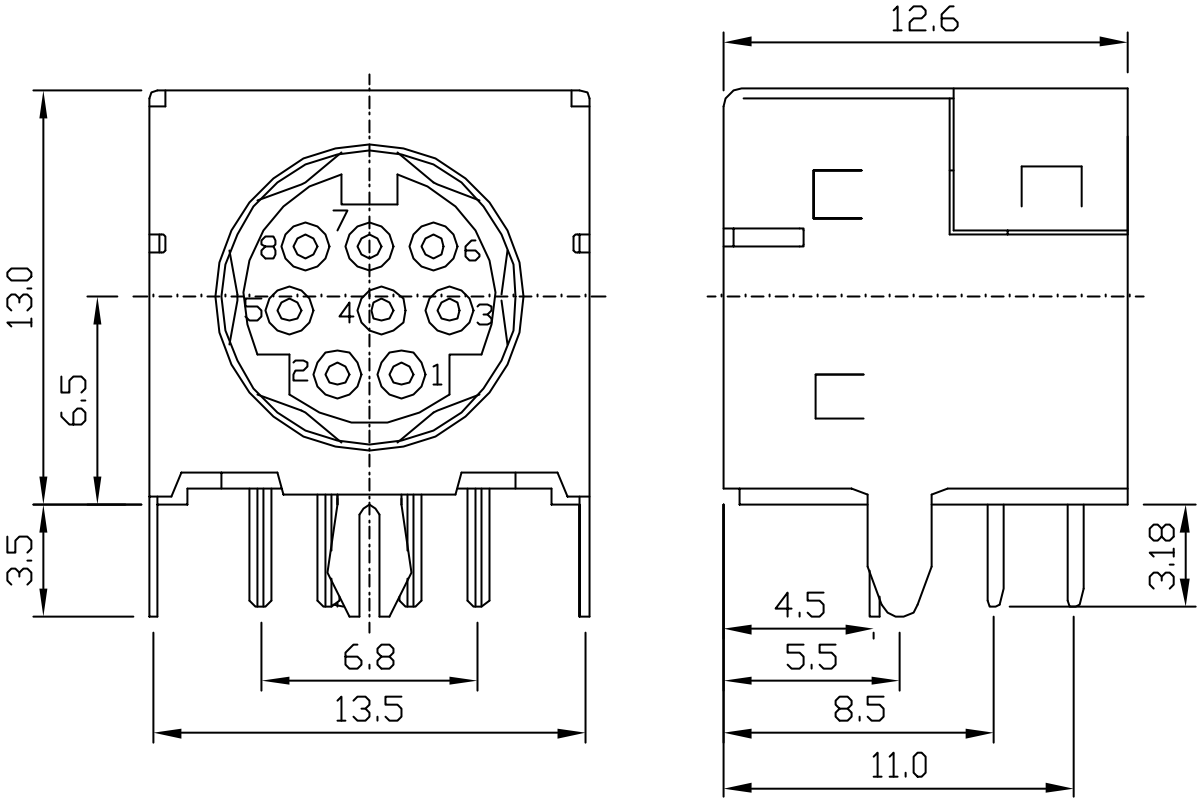

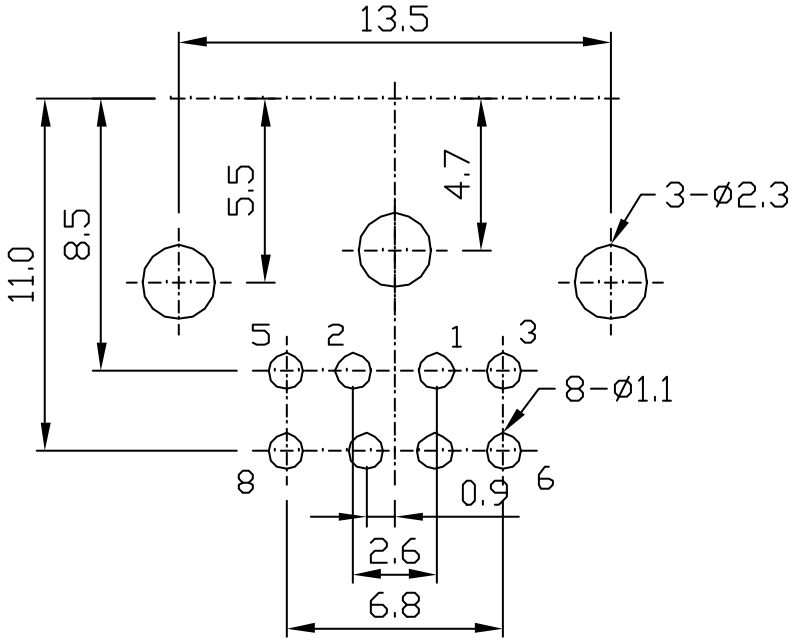

PCB LAYOUT
(BOTTOM VIEW)

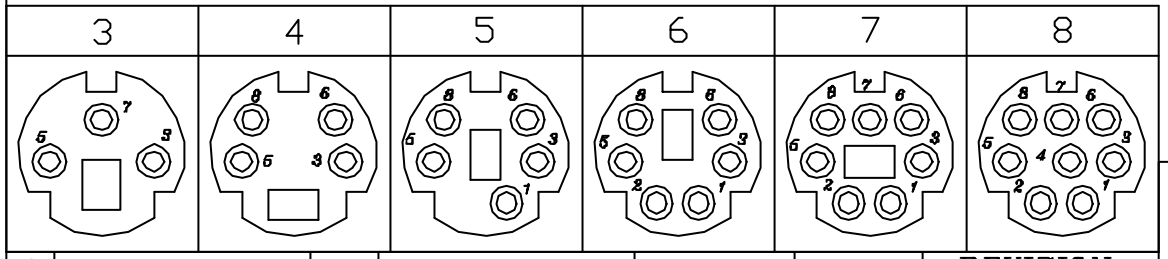

NO	PART NAME	Q'TY	MATERIAL	PLATED	COLOR	REVISION
6						
5	HOUSING	1	PBT-94V0		BLACK	4(04/15/03')
4	STOPPER	1	PBT-94V0		BLACK	
3	COVER	1	PBT-94V0		BLACK	
2	SHIELD	1	BRASS	TIN		
1	CONTACT	8	P.B.S	(Go/Tin)		

LIH SHENG PRECISION INDUSTRIAL CO., LTD.

TOLERANCE	PART NAME	MINI DIN SOCKET			
X. ±0.5 X.X ±0.3 X.XX ±0.15	PART NO.	LNB0509D-8C			
SCALE:4/1	UNIT	DATE	DRAW	CHECK	APPROVE
	M/M	08/06/01'	LEE WEN-CHENG		