正式	開模	設變	估價	參考
●				

HISTORY X COUNT	DATE	ECN NO.	REV.	REVISION	SIGN.
1					

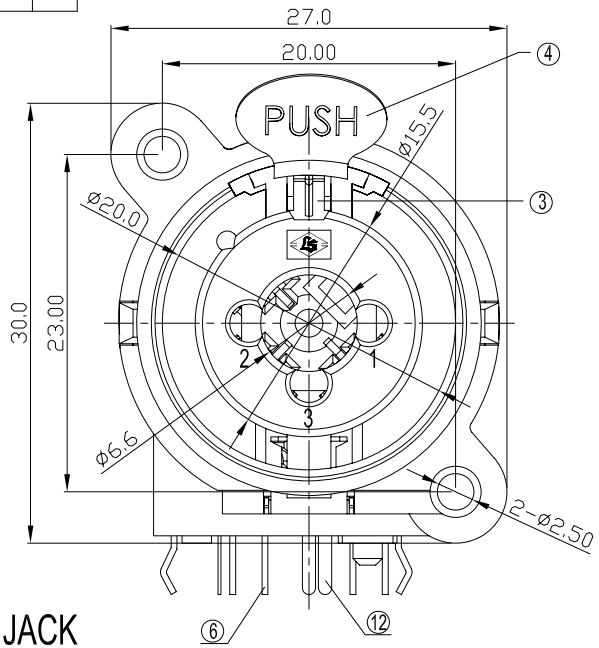

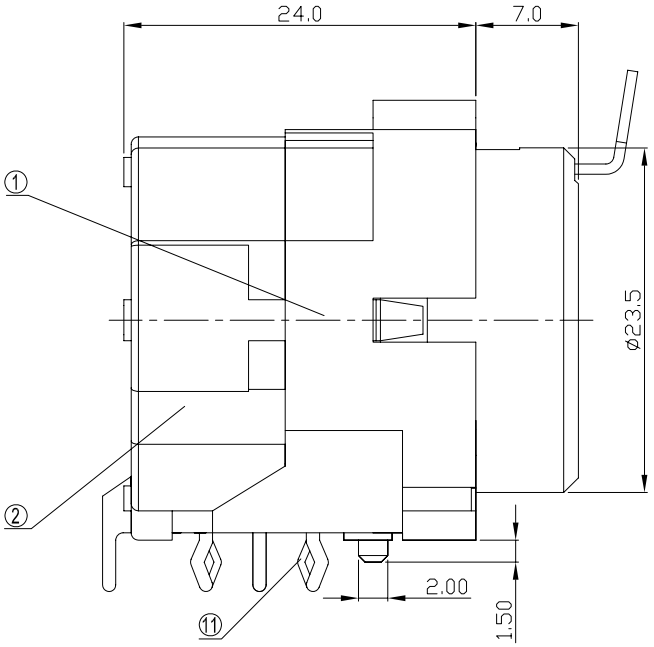

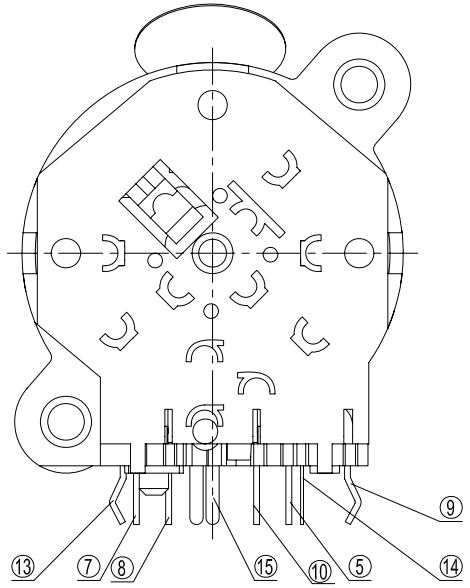

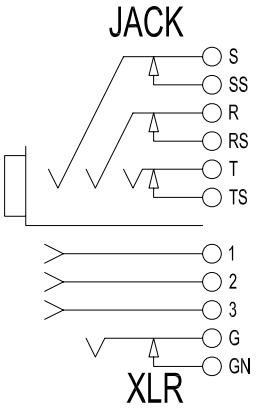

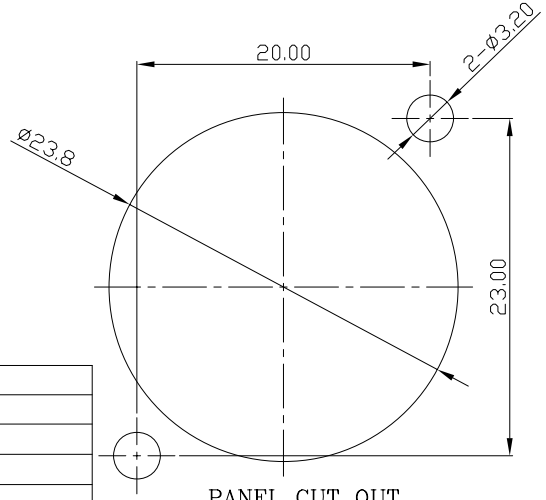

PANEL CUT OUT

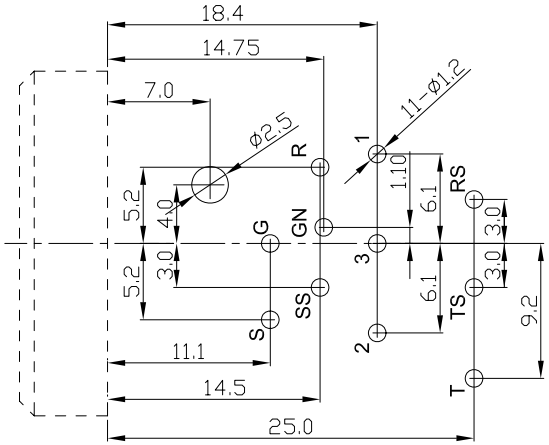

P.C.B. LAYOUT (±0.1)
(BOTTOM VIEW)

NO	PART NAME	Q'TY	MATERIAL	PLATED	REMARK
15	CONTACT 3	1	P.B.S	GOLD	
14	CONTACT 2	1	P.B.S	GOLD	
13	CONTACT 1	1	P.B.S	GOLD	
12	G SHUNT	1	P.B.S	GOLD	
11	G PIN	1	P.B.S	SLEEVE	
10	TIP SHUNT	1	BRASS	GOLD	
9	TIP	1	P.B.S	SLEEVE	
8	RING SHUNT	1	BRASS	GOLD	
7	RING	1	P.B.S	SLEEVE	
6	SLEEVE SHUNT	1	BRASS	GOLD	
5	SLEEVE	1	P.B.S	SLEEVE	
4	PUSH	1	Steel alloys	NICKEL	
3	LOCK	1	Steel alloys	NICKEL	
2	COVER	1	PA66		BLACK
1	BODY	1	PA66		BLACK

LIH SHENG PRECISION INDUSTRIAL CO., LTD.

TOLERANCE	Material		PART NAME	XLR COMBO JACK	
X. ±0.5					
X.X ±0.3	Thickness		PART NO.	LXC6401HP-11B-13A	
X.XX ±0.15	Disposal		DATE	2011/9/13	REV:A
	UNIT	SCALE	DRAW	CHECK	APPROVED
	mm	2:1	Leo	Chris	Lee

正式	開模	設變	估價	參考
●				

HISTORY X COUNT	DATE	ECN NO.	REV.	REVISION	SIGN.
1					

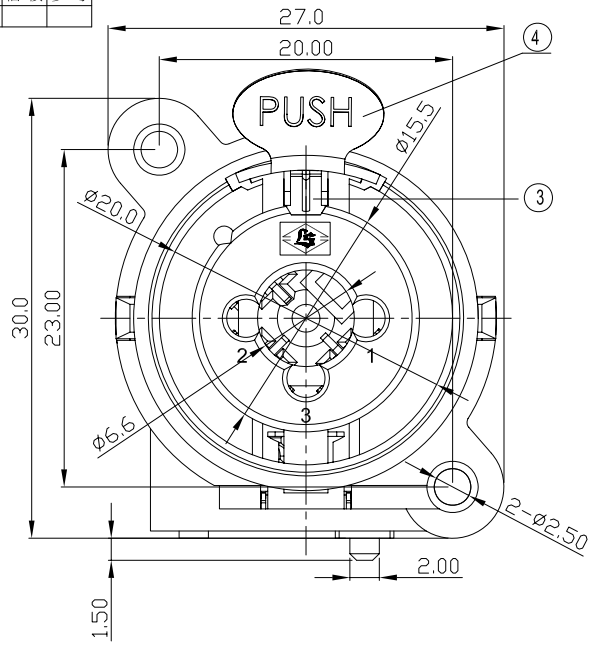

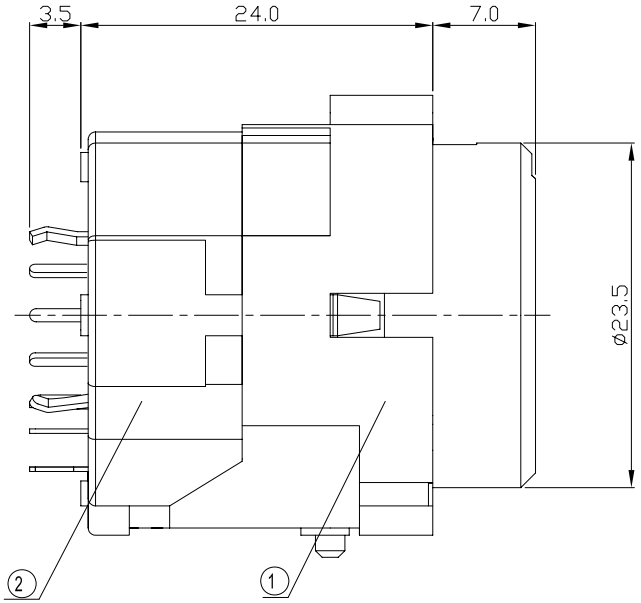

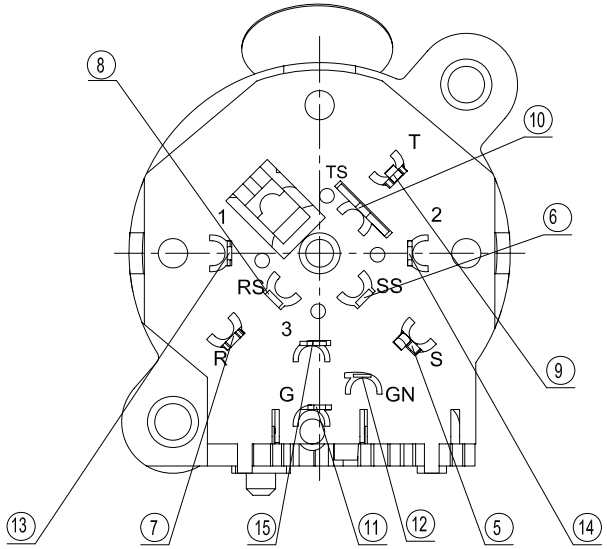

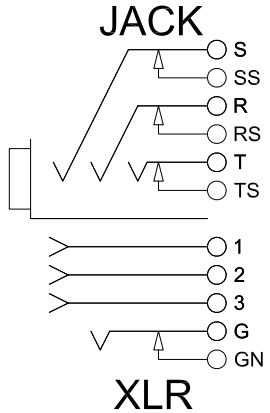

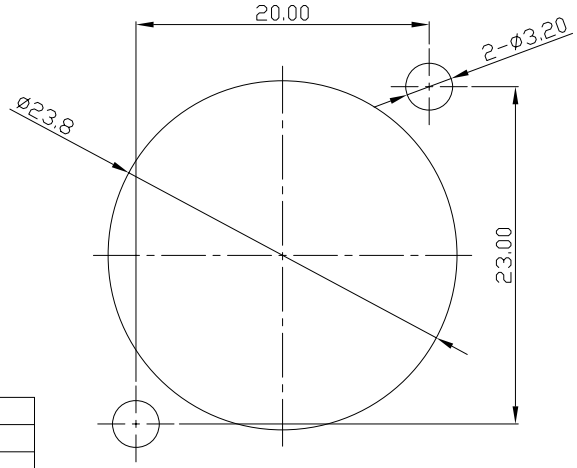

PANEL CUT OUT

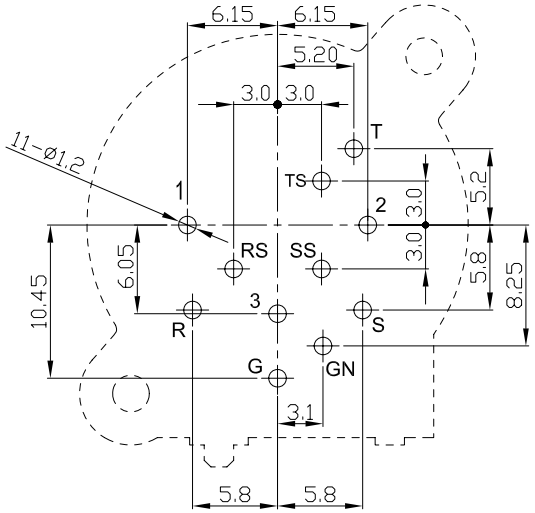

P.C.B. Layout(±0.1)
(Bottom View)

NO	PART NAME	Q'TY	MATERIAL	PLATED	REMARK
15	CONTACT 3	1	P.B.S	GOLD	
14	CONTACT 2	1	P.B.S	GOLD	
13	CONTACT 1	1	P.B.S	GOLD	
12	G SHUNT	1	P.B.S	GOLD	
11	G PIN	1	P.B.S	SLEEVE	
10	TIP SHUNT	1	BRASS	GOLD	
9	TIP	1	P.B.S	SLEEVE	
8	RING SHUNT	1	BRASS	GOLD	
7	RING	1	P.B.S	SLEEVE	
6	SLEEVE SHUNT	1	BRASS	GOLD	
5	SLEEVE	1	P.B.S	SLEEVE	
4	PUSH	1	Steel alloys	NICKEL	
3	LOCK	1	Steel alloys	NICKEL	
2	COVER	1	PA66		BLACK
1	BODY	1	PA66		BLACK

LIH SHENG PRECISION INDUSTRIAL CO., LTD.

TOLERANCE X. ±0.5	Material		PART NAME	XLR COMBO JACK	
X.X ±0.3	Thickness		PART NO.	LXC6401VP-11B-13A	
X.XX ±0.15	Disposal		DATE	2011/9/13	REV:A
	UNIT	SCALE	DRAW	CHECK	APPROVED
	mm	2:1	Leo	Chris	Lee