# Rotary Encoder EC09P2004 Spezifikation

REFERENCE DRAWING

| PRODUCT CODE |
|---|
| NN01204 |

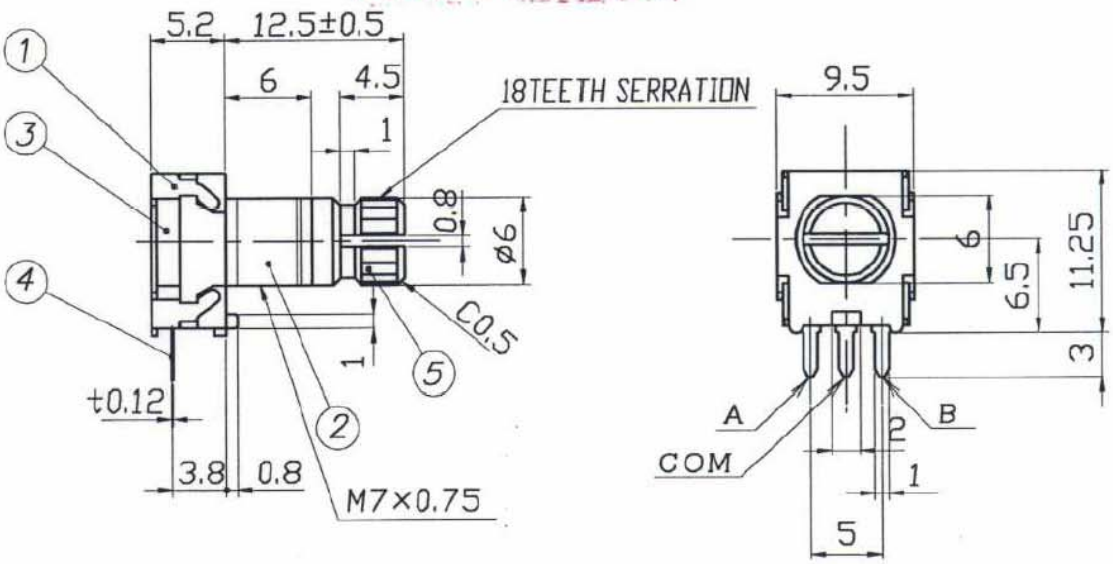


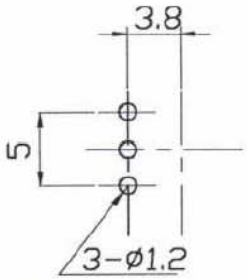


PCB Mounting hole Diagram

ISSUED
NOV 1 1.2005
SANSEI
ELECT RIC CO. LTD

承認担当
技術部 '05.11.14 渡辺
技術 '05.11.14 根岸
技術 05.11.14 佐藤

NOTE

1.SPECIFICATION No. :EC-S-016

2.ROTATION TORQUE: 30~200gf・cm

3.CHANGE OVER ANGLE: 30°±1.5°

| LTR | PART NAME | QTY | MATERIAL | REMARK | NOTE | |
|---|---|---|---|---|---|---|
| 11 | FLAT WASHER | 1 | STEEL | MFZn-C | (ACCESSORY) | |
| 10 | HEXAGONAL NUT | 1 | STEEL | MFZn-C | (ACCESSORY) | |
| 9 | STOPPER | 1 | PHOSPHOR BRONZE | | (BUILT IN) | EC1 |
| 8 | BALL | 1 | STEEL | | (BUILT IN) | |
| 7 | SPRING | 1 | STEEL | MFZn-C | (BUILT IN) | EC3 |
| 6 | ROTOR | 1 | POM | | (BUILT IN) | EC10 |
| 5 | SHAFT | 1 | BRASS | | | EC205 |
| 4 | TERMINAL | 3 | PHOSPHOR BRONZE | MBAg | | EC3 |
| 3 | TERMINAL BOARD | 1 | PBT | | | EC13 |
| 2 | CASE | 1 | ZINC ARROY | | | EC9 |
| 1 | FLAME | 1 | TIN PLATE | | | EC13 |

| | |
|---|---|
| ANGLE | ±3° |
| ABOVE100 | ±0.8 |
| ABOVE50TO100 | ±0.5 |
| ABOVE5TO50 | ±0.3 |
| UP TO 5 | ±0.2 |

TOLERANCES UNLESS OTHERWISE SPEC.

| SYMB. | DESCRIPTION | DATE | APVD. |
|---|---|---|---|
| | | | |

| PROJ. | UNIT | SCALE |
|---|---|---|
| | mm | 2/1 |

| APVD. | CHKD. | DRAWN. | DSGD. |
|---|---|---|---|
| Jun.4.'96 S.Katao | | Jun.3.'96 | K.Kojima Jun.04.96 |

MODEL No. EC09P20-204

TITLE PRODUCT DRAWING

DRAWING No. C96S0502

| | ROTARY ENCODER SPECIFICATION | APVD. | CHKD. | DSGD. |
|---|---|---|---|---|
| JUN. 03. 1996 | EC | S.Katano JUN.10'96 | Sorita JUN.10.'96 | M.Negishi Jun.10.1996 |

1. General
   1.1 Scope : This specification is applied for ROTARY ENCODER [EC09].
   1.2 Operating temperature : −10～+60℃
   1.3 Test conditions : Standard test conditions shall be 5 to 35℃ in temperature, 45 to 85%RH and 860 to 1060 hpa in barometric pressure.
   Should any doubt arise in judgement, tests shall be conducted at 20±2℃, 65±5%RH and 860 to 1060 hpa.
2. Appearance, structure and dimension
   2.1 Appearance : Functionally free from rust, crak and bad plating.
   2.2 Structure and dimension : As per attached outline drawing.
3. Rating
   3.1 〔10〕 V DC, 〔1〕 mA (resistive load)
   3.2 Maximum operating current : 〔2.5〕 mA (resistive load)
4. Electrical performance

| | Property | Test conditions | Performance |
|---|---|---|---|
| 4.1 | Contact Resistance | 1KHz±200Hz (MAX.20mV, MAX.5mA) | MAX. 〔1〕 Ω |
| 4.2 | Bounce | 〔10〕 V DC, 〔1〕 mA (Sliding speed : 60rpm) | MAX. 〔5〕 mS |
| 4.3 | Output Signal | A and B (2 signal)<br>Asignal (A-COM) open close open<br>Bsignal (B-COM) open close open<br>Direction CW<br>Asignal (A-COM) close open close<br>Bsignal (A-COM) open close open<br>Direction CCW | |
| 4.4 | Resolution | Output pulses/rotation | 〔20〕 pulses (endless) |
| | Click points | | 〔20〕 clicks<br>A-COM, B-COM : off at click position |



| SYMB. | DATE/NAME | DESCRIPTION |
|---|---|---|
| | | |
| △1 | Jun.10.1996 M.Negishi | 製品に合せる為、変更する |

EC−S−016

| | Property | Test conditions | Performance |
|---|---|---|---|
| 4.6 | Phase Difference | T=cycle<br>Asignal (A-com)<br>Bsignal (B-com)<br> 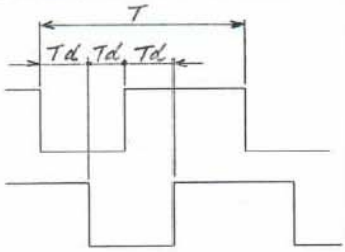 | Td=1/5T±1/10T<br>⚠ (A state of Non-click) |
| 4.7 | Voltage proof | 〔250〕V AC(50～60Hz,2mA sensitivty current) is applied between the terminal and shaft reseptacle for 1 minute. | Not breaking insulation. |
| 4.8 | Insulation Resistance | 〔500〕V DC is applied between the terminal and shaft receptacle for 1 minute ±5 seconds. | More than 〔100〕MΩ |
| 4.9 | Duty ratio | | ⚠〔40〕%<br>(A state of Non-click) |

5. Mechanical performance

| | Property | Test conditions | Performance |
|---|---|---|---|
| 5.1 | Operating Force | | As per individual specification. |
| 5.2 | Changeover Angle | | As per individual specification. |
| 5.3 | Terminal Strength | A static load 4.9 N (0.5Kgf) is added to vertical direction on the tip of the terminal for 1 minute.<br>One time per terminal. | The terminal may be deformed, but shall not sustain any trouble as deviation and breaking of insulation material. Electeical performance shall be assured. |
| 5.4 | Actuator Strength | 1:A static load 29.4 N (3Kgf) is added pushing the shaft and to the stretch direction for 15 minutes.<br>2:Pushing the shaft vertically is added a static load 9.8 N (1Kgf) to the position of 〔10〕mm from the fixing face as per this drawing for 15 minutes.<br> 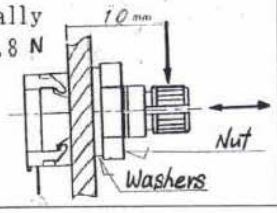 | Free from noticeable looseness or bending.<br>Also an actuator shall mechanically work normally.<br>Electrical performance shall be assured. |
| 5.5 | Actuator Swing | A static load 4.9 N (0.5Kgf) is applied to vertical direction on the tip of the shaft and to messure swing width.(maximum) | |

| measurement dimension | measurement position | swing width (maximum) |
|---|---|---|
| 15 mm | 10 mm | less than 0.17mm |
| 20 | 15 | 0.25 |
| 25 | 20 | 0.35 |
| 30 | 25 | 0.42 |
| more than 35 | 30 | 0.50 |

| | Property | Test conditions | Performance |
|---|---|---|---|
| 5.6 | Solderability | 1.Temperature of solder : 230±5℃<br>2.Duration of dipping : 3±0.5 seconds | More than 75% of the dipping part shall be covered by solder. |
| 5.7 | Soldering heat resistance | 1.Temperature of solder : 260±5℃<br>(300±10℃ manually)<br>2.Duration of dipping : 5±1 seconds<br>(3±1 seconds manually) | There shall not be deforming in appearance.<br>Electrical performance shall be assured. |

6.Endurance

| | Property | Test conditions | Performance |
|---|---|---|---|
| 6.1 | Operating life (without load) | 〔100,000〕 cycle operations at a rate of 10 cycles per minute without load. | Contact resistance<br>:Max 1Ω<br>Insulation resistance<br>:More than 10MΩ<br>Voltage proof<br>:100V AC, 1 minute not breaking insulation.<br>Rotation torque<br>:5.1 shall be assured.<br>There shall be no defects in appearance or in the mechanical functions. |
| 6.2 | Operating life (with load) | 〔100,000〕 cycle operations at a rate of 10 cycles per minute with (10)v dc,(1)mA. (Resistive load) | |

7.Weatherability

| | Property | Test conditions | Performance |
|---|---|---|---|
| 7.1 | Cold proof | Switch for test being kept in the conditions at -20±2℃ for 96 hours and in a normal ambient condition for 1 hour then to be measured within 1 hour. Drops of water being taken away. | Contact resistance<br>:Max 1Ω<br>Insulation resistance<br>:More than 10MΩ<br>Voltage proof<br>:100V AC, 1 minute not breaking insulation.<br>Rotation torque<br>:5.1 shall be assured.<br>There shall be no defects in appearance or in the mechanical functions. |
| 7.2 | Dry heat proof | Switch for test being kept in the conditions at 70±2℃ for 96 hours and in a nomal ambient condition for 1 hour then to be measured within 1 hour. Drops of water being taken away. | |
| 7.3 | Damp heat proof | Switch for test being kept in the conditions at 40±2℃ and 90~95%RH for 96 hours, and in a normal ambient condition for 1 hour then to be measured within 1 hour. Drops of water being taken away. | |

Notice

1.Please pay special attention at the time of soldering not to give an extra force on terminals as to cause any deforming of them and resulting in bad effects on the electrical properties. Please use manual soldering instead of automatic dip soldering because there are possibilities to structually flow flux into switch inside.

2.Please pay attention not to give over-force to an actuator as specified on the specification.

3.Please request us an official approved drawing prior to operation.

Subject to change of specifications without advance notice.

## INSTRUCTIONS ON SAFETY PRODUCT

The quality product keeps every possible effort, but owing to its life some increase for short, open or bouncing might generate.

Therefore, as long as any set design needed safety is concerned, check any affect to the set beforehand against single trouble of part and attempt ;

1) any safety with protection circuit or protection device,
2) any safety with redundant circuit to avoid single trouble,

Secure further safety along with fail-safe design.

Please have our advanced instructions whenever any appliance related to safety is used, such as ; medical, automobile, electric decoration, transportation, electric generator, gas fittings, calamity preventation, crime preventation, equipment/work, industrial.....etc.