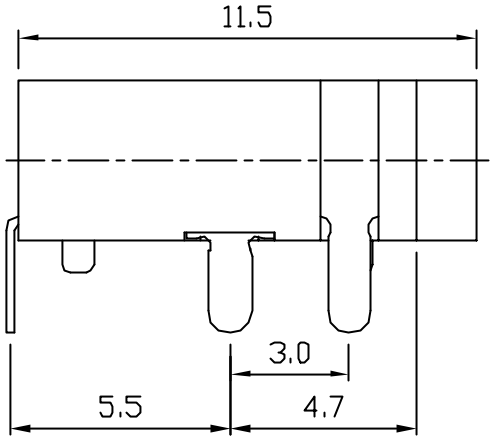

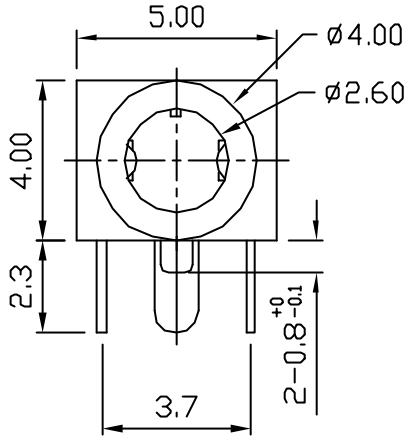

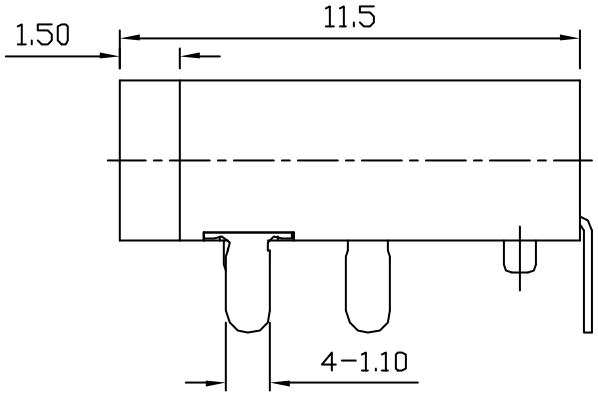

4P PLUG

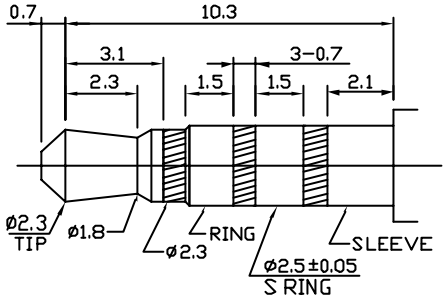

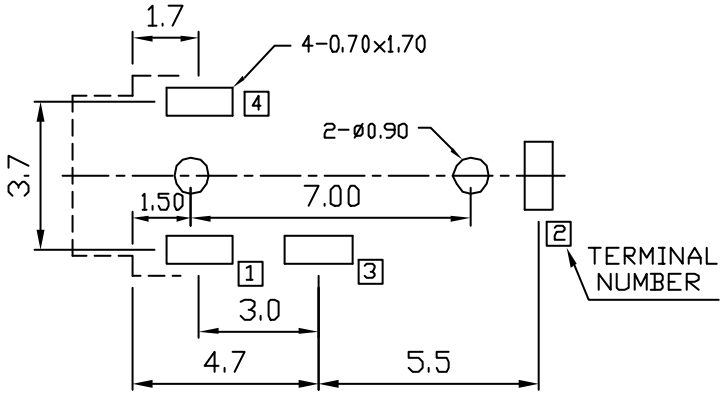

PCB LAYOUT
(BOTTOM VIEW)

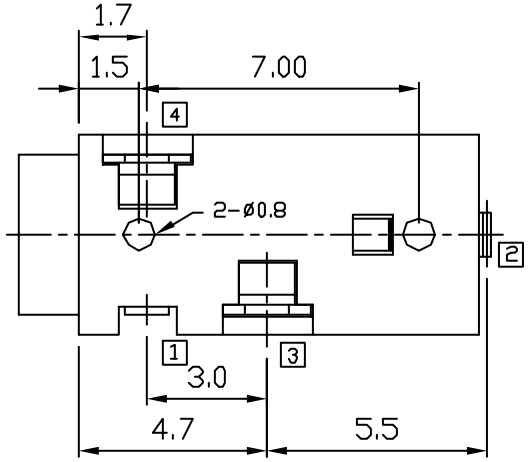

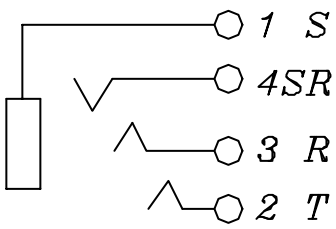

NO	PART NAME	Q'TY	MATERIAL	PLATED	COLOR
5	HOUSING	1	PA66		BLACK
4	SLEEVE TERMINAL	1	P.B.S	TIN	
3	RING	1	P.B.S	TIN	
2	TIP	1	P.B.S	TIN	
1	SLEEVE	1	P.B.S	TIN	

REVISION
1(00/00/00')

LIH SHENG PRECISION INDUSTRIAL CO., LTD.

TOLERANCE
X. ±0.5
X.X ±0.3
X.XX ±0.15

PART NAME: EARPHONE JACK

PART NO.: LJE0267A-4P

SCALE:5/1	UNIT	DATE	DRAW	CHECK	APPROVE
	M/M	12/31/02'	LEE VEN-CHENG		