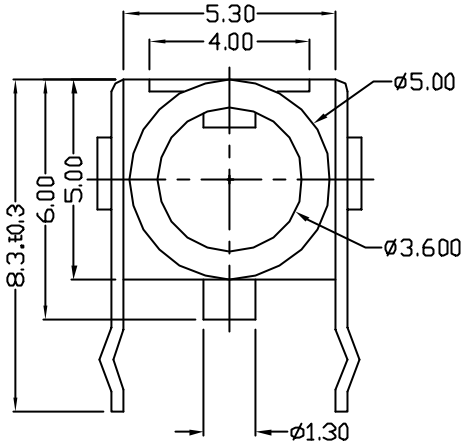

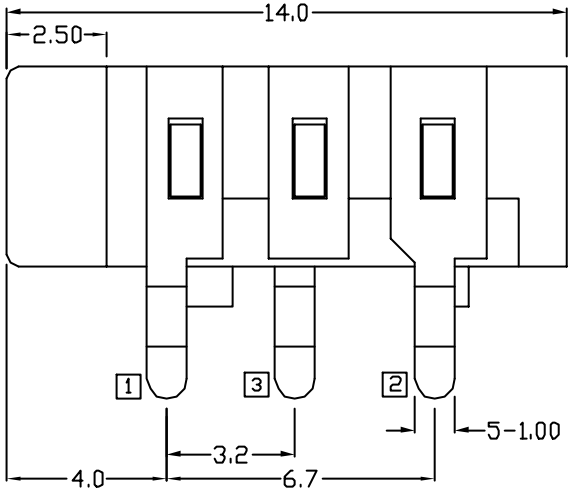

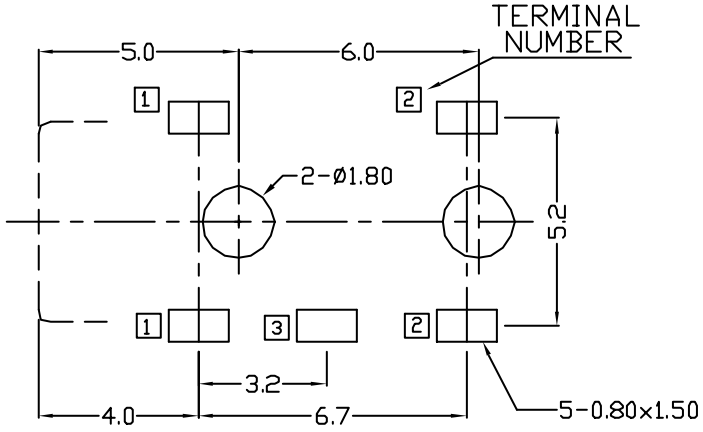

PCB LAYOUT
(BOTTOM VIEW)

PLUG

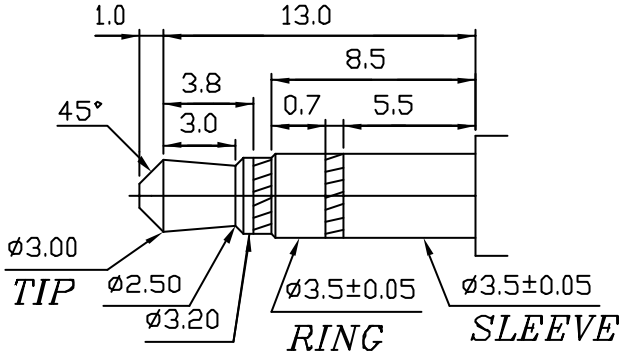

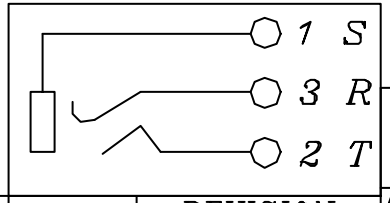

NO	PART NAME	Q'TY	MATERIAL	PLATED	COLOR	REVISION
5						
4	BUSHING	1	PBT		BLACK	1(00/00/00')
3	RING	1	P.B.S	TIN		
2	TIP	1	P.B.S	TIN		
1	SLEEVE	1	P.B.S	TIN		

LIH SHENG PRECISION INDUSTRIAL CO., LTD.

TOLERANCE
X. ±0.5
X.X ±0.3
X.XX ±0.15

PART NAME: EARPHONE JACK

PART NO.: LJE0377-3RT

SCALE:5/1	UNIT	DATE	DRAW	CHECK	APPROVE
	M/M	01/06/03'	LEE WEN-CHENG		