正式	開模	設變	估價	參考
●				

HISTORY X COUNT	DATE	ECN NO.	REV.	REVISION	SIGN.
1					

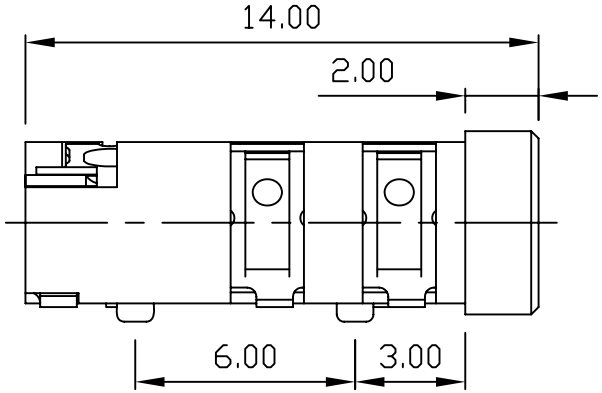

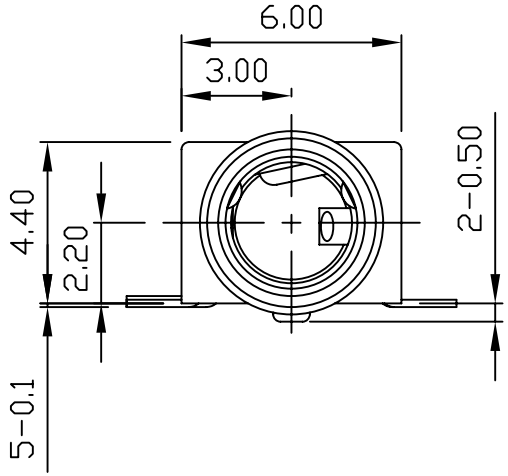

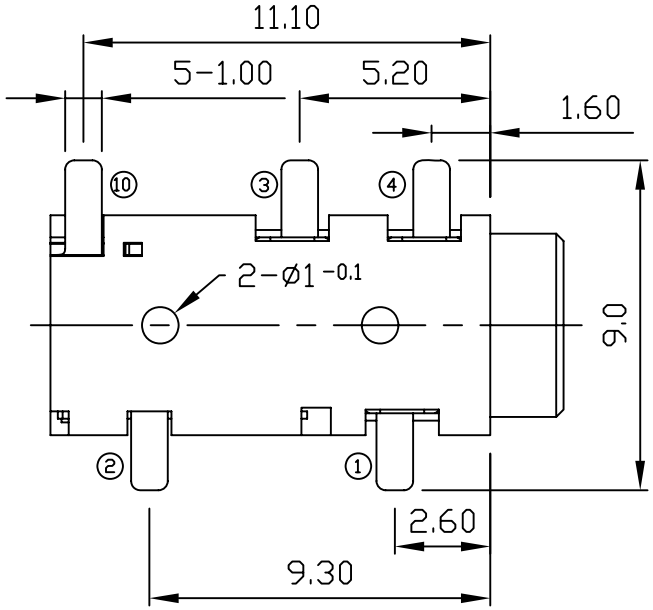

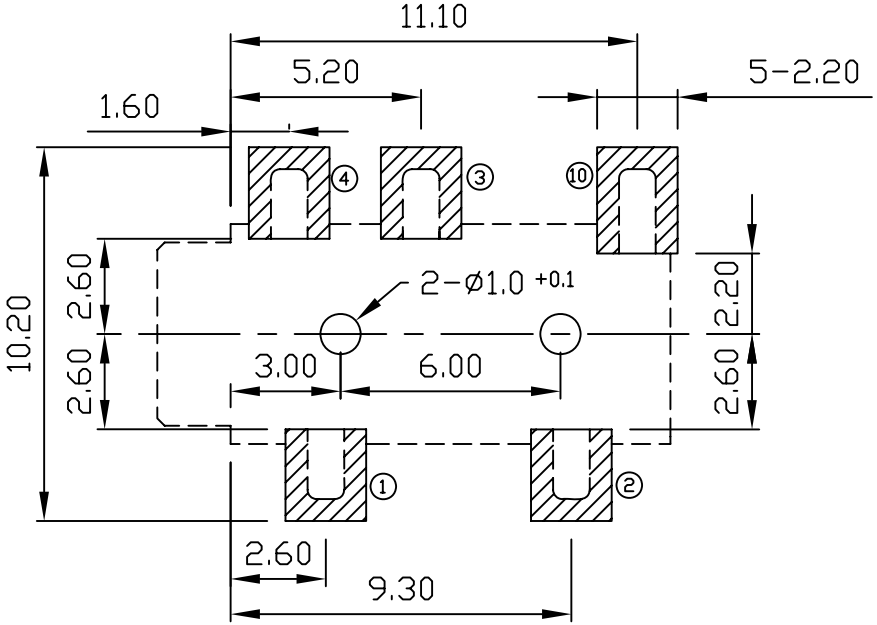

RECOMMENDED
SOLDER PAD LAYOUT

SCHEMATIC

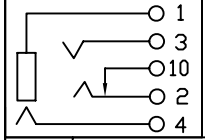

NO	PART NAME	Q'TY	MATERIAL	PLATED	REMARK
6	HOUSING	1	PA6T		
5	TERMINAL 10	1	BRASS	GOLD	
4	TERMINAL 4	1	COOPPER ALLOY	GOLD	
3	TERMINAL 3	1	COOPPER ALLOY	GOLD	
2	TERMINAL 2	1	COOPPER ALLOY	GOLD	
1	TERMINAL 1	1	COOPPER ALLOY	GOLD	

LIH SHENG PRECISION INDUSTRIAL CO., LTD.

TOLERANCE X. ±0.5	Material		PART NAME	EARPHONE JACK	
X.X ±0.3	Thickness		PART NO.	LJE0394-5-G (SMT)	
X.XX ±0.15	Disposal		DATE	12/19/06'	REV:A
	UNIT	SCALE	DRAW	CHECK	APPROVE
	mm	1:1	Chris	Jacky	Cooper