正式	開模	設變	估價	參考
●				

HISTORY X COUNT	DATE	ECN NO.	REV.	REVISION	SIGN.
1					

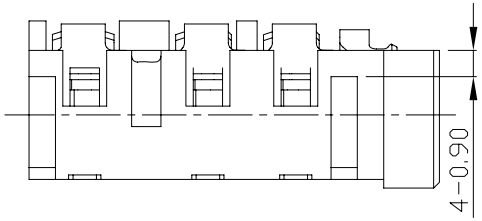

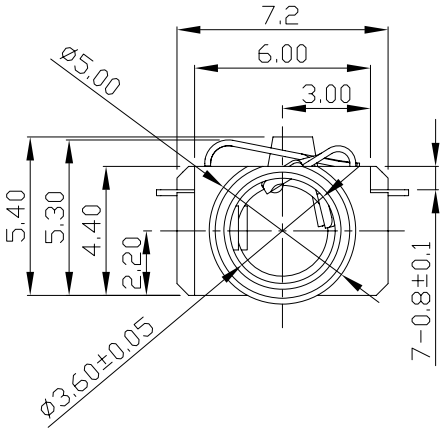

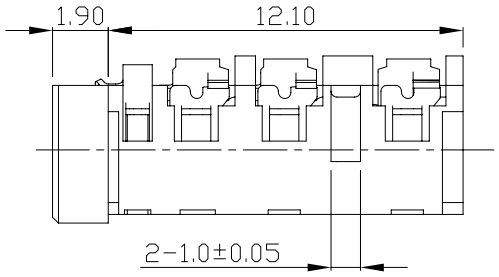

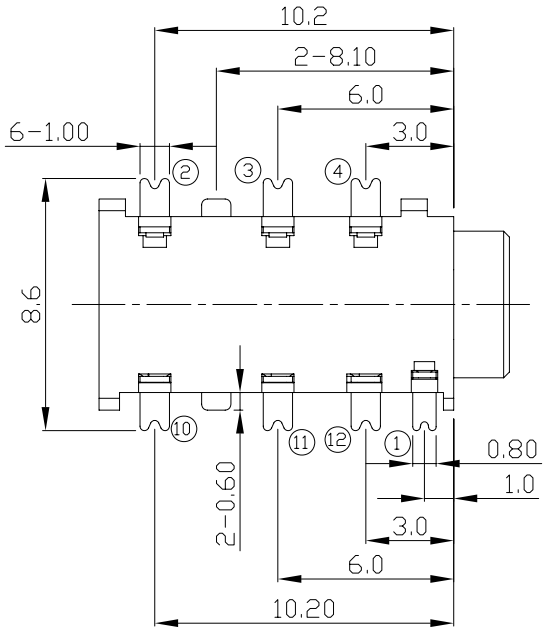

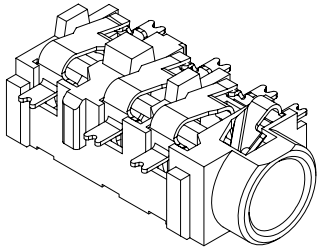

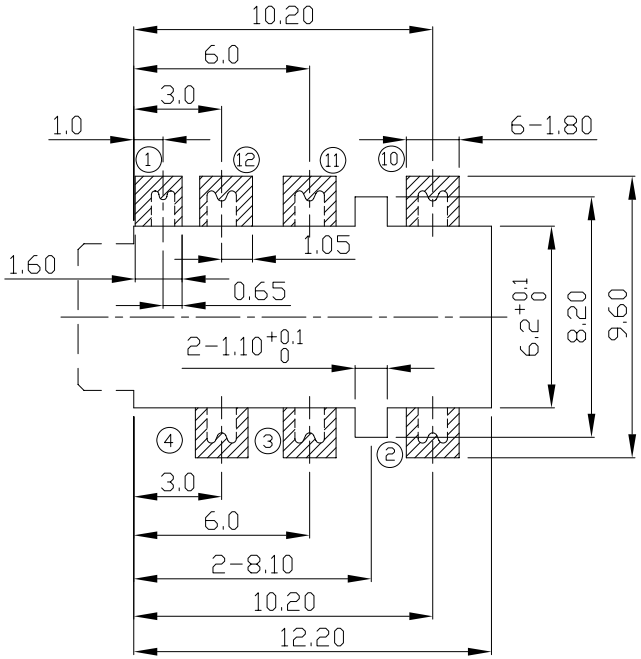

RECOMMENDED
SOLDER PAD LAYOUT

SCHEMATIC

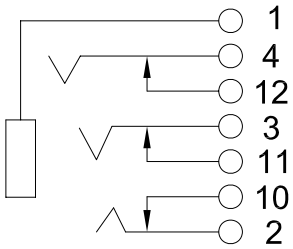

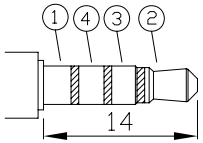

ø3.5 MATE PLUG

NO	PART NAME	Q'TY	MATERIAL	PLATED	REMARK
8	HOUSING	1	PA6T		BLACK
7	TERMINAL 12	1	P.B.S	GOLD	
6	TERMINAL 11	1	P.B.S	GOLD	
5	TERMINAL 10	1	P.B.S	GOLD	
4	TERMINAL 4	1	P.B.S	GOLD	
3	TERMINAL 3	1	P.B.S	GOLD	
2	TERMINAL 2	1	P.B.S	GOLD	
1	TERMINAL 1	1	P.B.S	GOLD	

LIH SHENG PRECISION INDUSTRIAL CO., LTD.

TOLERANCE X. ±0.5	Material		PART NAME	EARPHONE JACK	
X.X ±0.3	Thickness		PART NO.	LJE3508-7-G	
X.XX ±0.15	Disposal		DATE	26/JUL/11'	REV:A
	UNIT	SCALE	DRAW	CHECK	APPROVED
	mm	4:1	Leo	Chris	Chris