正式	開模	設變	估價	參考
●				

HISTORY X COUNT	DATE	ECN NO.	REV.	REVISION	SIGN.
1 x3	17/NOV/10'	N201011002	A	變更電鍍。	Chris
2 x1	02/FEB/12'	N201202001	B	變更膠柱長度。	Chris

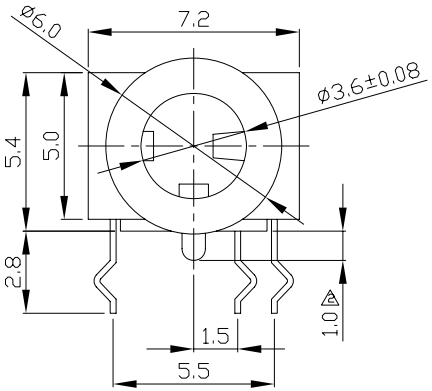

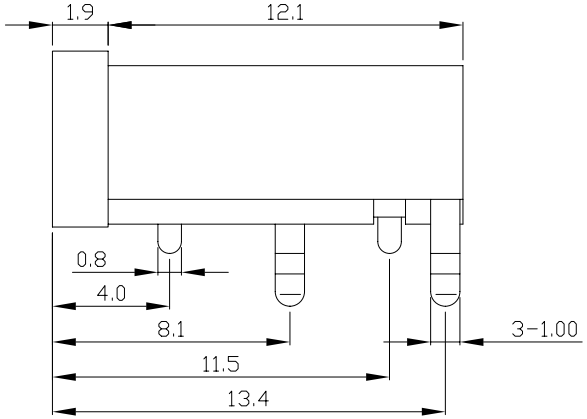

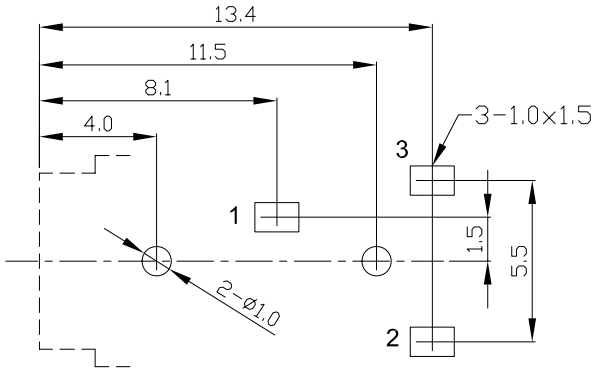

P.C.B LAYOUT(±0.1)
(BOTTOM VIEW)

PLUG

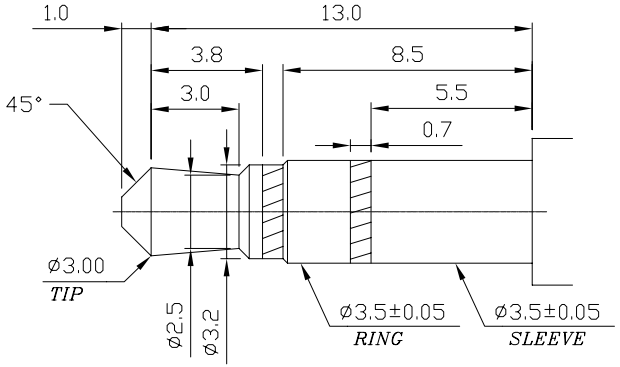

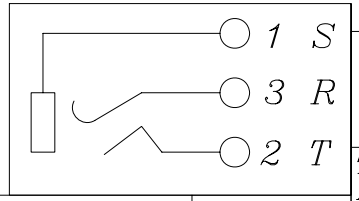

NO	PART NAME	Q'TY	MATERIAL	PLATED	REMARK
4	Housing	1	PBT		Black
3	Tip Terminal	1	P.B.S	Matte Tin Plated ⚠	
2	Ring Terminal	1	P.B.S	Matte Tin Plated ⚠	
1	Sleeve Terminal	1	P.B.S	Matte Tin Plated ⚠	

LIH SHENG PRECISION INDUSTRIAL CO., LTD.

TOLERANCE X. ±0.5	Material		PART NAME	EARPHONE JACK	
X.X ±0.3	Thickness		PART NO.	LJE3531	
X.XX ±0.15	Disposal		DATE	01/01/91'	REV:B
	UNIT	SCALE	DRAW	CHECK	APPROVED
	mm	4:1	Leo	Chris	Chrsi