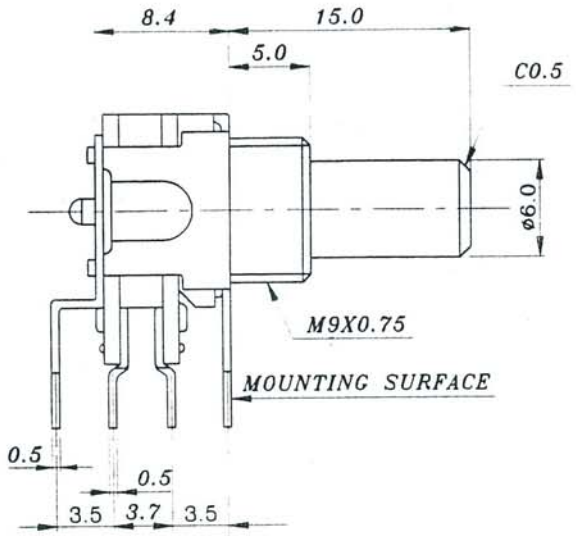

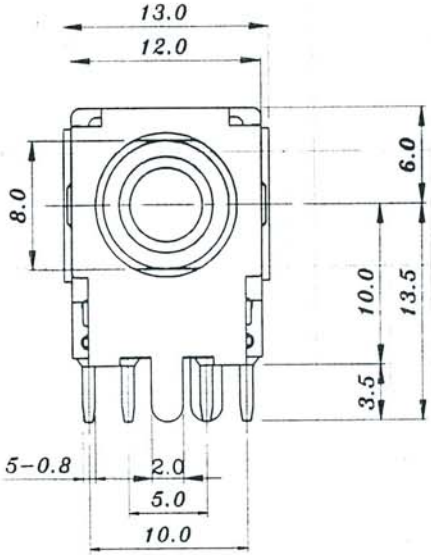

C.C.W FULL POSITION

CIRCUIT DIAGRAM

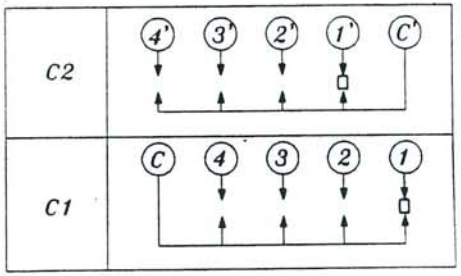

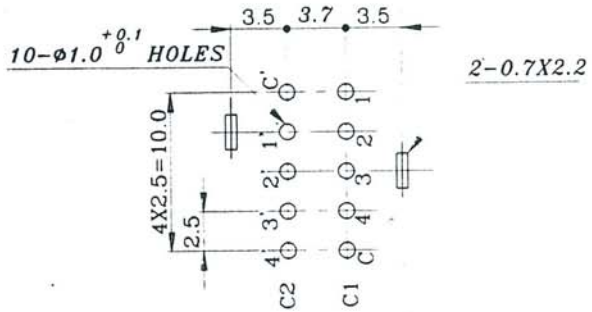

P.C.B LAY OUT

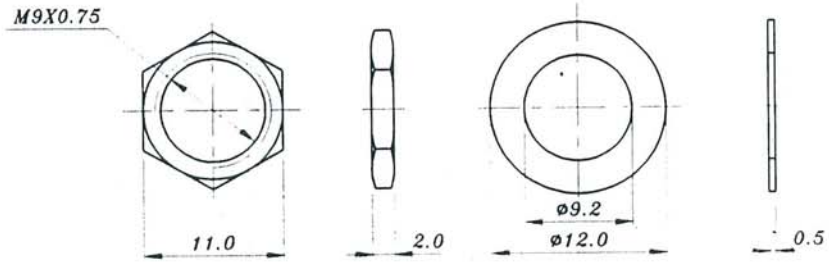

MATERIAL	SURFACE TRETMENT	N O T E S

No.	DATE	DESCRIPTIONS	CHKD
1			
2			
3			
4			
5			

UNITS	SCALE	TOLERANCE	PART NAME
mm	3/1	±0.3	
DATE	2000. 4. 22.		MODEL NAME
APPD	CHKD	CHKD	DSGD.
			PART CATALOG No

ROTARY SWITCH

SRC-04204-15RP

SPEC. NO. ROTARY S/W공통	SPECIFICATION	MODEL NAME ROTARY S/W

1. Electrical Specification.

1-1. Rating : 3 A , 16 V DC.
1-2. Contact Resistance : 50mΩ max.
1-3. Insulation Resistance : 100MΩ min. 500 V DC.
1-4. Withstand Voltage : AC 500V/1 minute (Not breaking insulation)

2. Mechanical Specification.

2-1. Step Angle : 30° ± 3° (operating angle of one step)
2-2. Circuit : 2C - 4P
2-3. Rotation Torque : 500 ± 200g. cm
2-4. Terminal Strength : more than 500g. cm
2-5. Shaft Stop Strength : more than 5Kg. cm
2-6. Shaft Wobble : 0.6mm max. based on 15mm of shaft length.
(Others follows a propotional expression.)

3. Durability.
; with no load applide, 15,000 cycles continuous are performed.

3-1. Rotation Torque : within ±30% of specification.
3-2. Contact Resistance : max. 80mΩ.
3-3. Others Should be satisfied with term 1 and 2.

MODEL NAME	SRC-04204			DATE	1995. 2. 26.
Approved by	Checkd by	Drawn by	Drawing No.	Description	